Spare parts list for
High-Pressure Spray Gun

Ecco 510

ECCO

ESL 12/02-18

Ecco 510 .....Prod. No. 8611 4119 05

Max. working pressure: 350 bar

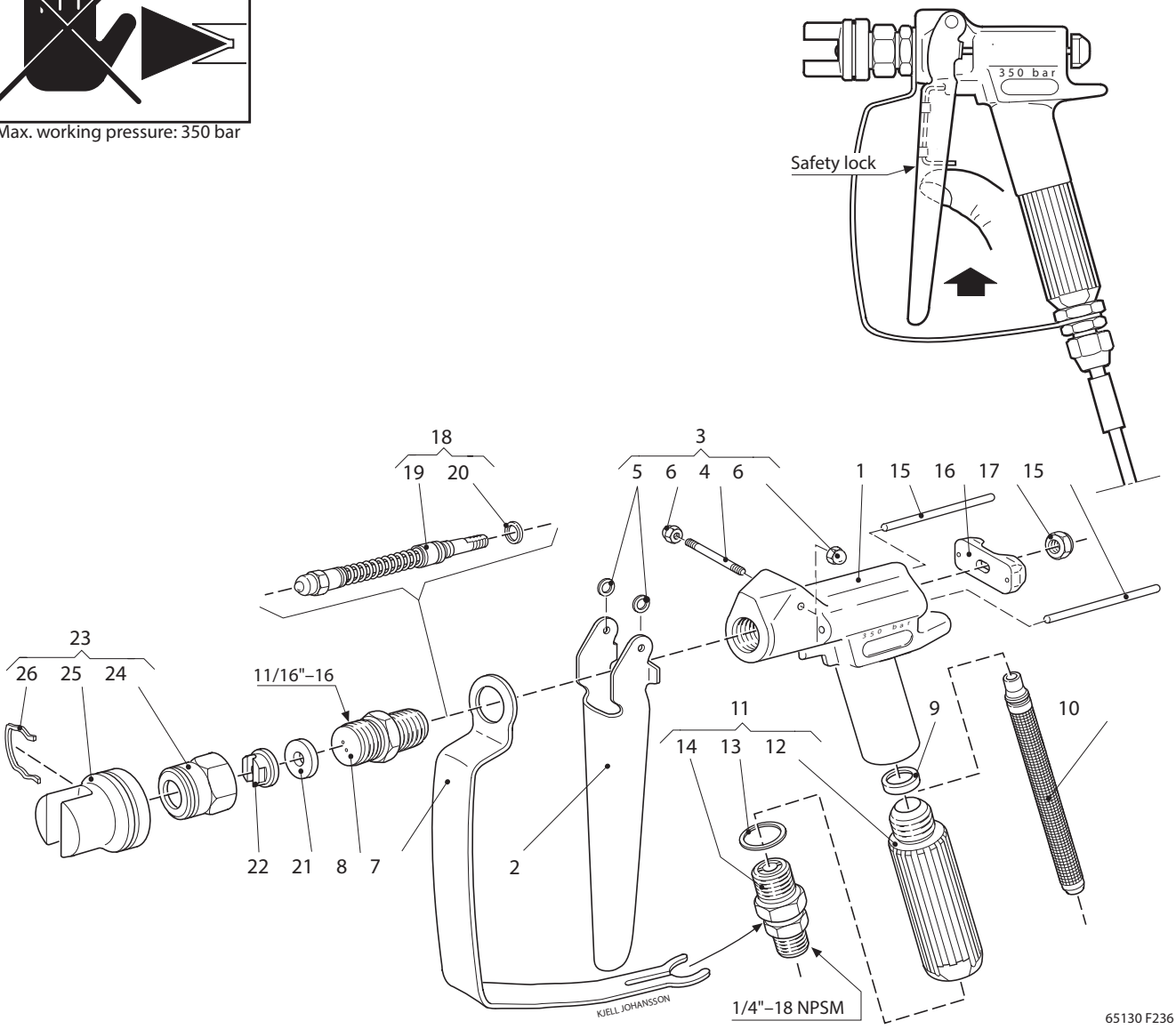

Part numbers **in bold type** designate consumption parts.

Ref.				Ref.			
1	–	1	Gun body	17	**6003 9886 00**	1	Lock nut
2	6003 9880 00	1	Trigger	18	**6003 9887 00**	1	Needle valve, compl.
3	6003 9881 00	1	Trigger pin, compl.	19	–	1	– Needle valve
4	–	1	– Trigger pin	20	**6020 4412 00**	1	– Seal
5	–	2	– Washer	21	**6101 5670 00**	1	Gasket
6	–	2	– Nut	22	– [1]	1	Standard spray tip (see printed matter No 9836 3060)
7	6020 4403 00	1	Trigger guard				
8	**6003 9882 00**	1	Valve seat	23	6003 7326 00	1	Nozzle guard, compl.
9	**6020 4418 00**	1	Handle seal (Nylon)	24	–	1	– Retaining ring
10	**6803 3516 00**	1	Strainer (60 mesh, white)	25	–	1	– Cap lug
11	6020 5020 00	1	Handle, compl. with swivel	26	6803 3229 00	1	– Snap ring
12	–	1	– Handle				
13	**6020 4429 00**	1	– Gasket				
14	6003 9883 00	1	– Swivel				**Optional Equipment**
15	6003 9884 00	2	Push rod	10	**6803 3575 00**	1	Strainer (100 mesh, yellow)
16	6003 9885 00	1	Push rod tree	10	**6803 3517 00**	1	Strainer (200 mesh, red)

[1] Optional equipment

ECCO FINISHING AB, Box 93, S-532 22 SKARA, Sweden,
Tel: +46 (0)511-134 45, Fax: +46 (0)511-180 13
E-mail: info@eccofinishing.com • www.eccofinishing.com

CE Ex II 2

9836 3196 00
2014-01